Introduction to Robotics

Lecture 4: Twists, Exponential Coordinates and Wrenches

Konstantinos Chatzilygeroudis - costashatz@upatras.gr

Department of Electrical and Computer Engineering
University of Patras

Template made by Panagiotis Papagiannopoulos

Orientation Errors or Differences

In other words, I am at $\boldsymbol{R}_{wc}$ and I want to end up at $\boldsymbol{R}_{wt}$. What is the orientation error or difference?

Orientation Errors or Differences

In other words, I am at $\boldsymbol{R}_{wc}$ and I want to end up at $\boldsymbol{R}_{wt}$. What is the orientation error or difference?

- First, an orientation difference is another rotation matrix!

Orientation Errors or Differences

In other words, I am at $\boldsymbol{R}_{wc}$ and I want to end up at $\boldsymbol{R}_{wt}$. What is the orientation error or difference?

- First, an orientation difference is another rotation matrix!
- I can compute $\boldsymbol{R}_{ct}$:

Orientation Errors or Differences

In other words, I am at $\boldsymbol{R}_{wc}$ and I want to end up at $\boldsymbol{R}_{wt}$. What is the orientation error or difference?

- First, an orientation difference is another rotation matrix!
- I can compute $\boldsymbol{R}_{ct}$:

$$\begin{aligned} \boldsymbol{R}_{ct} &= \boldsymbol{R}_{tc}^T \\ &= \left(\boldsymbol{R}_{tw}\boldsymbol{R}_{wc}\right)^T \\ &= \left(\boldsymbol{R}_{wt}^T\boldsymbol{R}_{wc}\right)^T \\ \Rightarrow \boldsymbol{R}_{ct} &= \boldsymbol{R}_{wc}^T\boldsymbol{R}_{wt} \end{aligned}$$

Orientation Errors or Differences

In other words, I am at $\boldsymbol{R}_{wc}$ and I want to end up at $\boldsymbol{R}_{wt}$. What is the orientation error or difference?

- First, an orientation difference is another rotation matrix!
- I can compute $\boldsymbol{R}_{ct}$:

$$\begin{aligned} \boldsymbol{R}_{ct} &= \boldsymbol{R}_{tc}^T \\ &= (\boldsymbol{R}_{tw}\boldsymbol{R}_{wc})^T \\ &= (\boldsymbol{R}_{wt}^T\boldsymbol{R}_{wc})^T \\ \Rightarrow \boldsymbol{R}_{ct} &= \boldsymbol{R}_{wc}^T\boldsymbol{R}_{wt} \end{aligned}$$

- This is the orientation error expressed in *body frame*
- How can I get the error in *world frame*?

$$\begin{aligned} \boldsymbol{R}_{ct}^w\boldsymbol{R}_{wc} &= \boldsymbol{R}_{wt} \\ \Rightarrow \boldsymbol{R}_{ct}^w &= \boldsymbol{R}_{wt}\boldsymbol{R}_{wc}^T \end{aligned}$$

Integrating Orientations with Angular Velocity

$$\begin{aligned} \boldsymbol{R}_{k+1} &= \boldsymbol{R}_k \exp(\hat{\boldsymbol{\omega}}_b dt) \\ &= \exp(\hat{\boldsymbol{\omega}}_w dt) \boldsymbol{R}_k \end{aligned}$$

Be careful:

- "Right" multiplication is *local*
- "Left" multiplication is *global/world*

Interpolating Orientations

We cannot do:

$$\boldsymbol{R} = \boldsymbol{R}_1 + \alpha(\boldsymbol{R}_2 - \boldsymbol{R}_1)$$

for $\alpha \in [0, 1]$.

Interpolating Orientations

We cannot do:

$$\boldsymbol{R} = \boldsymbol{R}_1 + \alpha(\boldsymbol{R}_2 - \boldsymbol{R}_1)$$

for $\alpha \in [0, 1]$.

We CAN do:

$$\begin{aligned} \boldsymbol{R} &= (\boldsymbol{R}_2 \boldsymbol{R}_1^T)^\alpha \boldsymbol{R}_1 \\ &= \boldsymbol{R}_1 (\boldsymbol{R}_1^T \boldsymbol{R}_2)^\alpha \end{aligned}$$

Why?

Interpolating Orientations

We cannot do:

$$\boldsymbol{R} = \boldsymbol{R}_1 + \alpha(\boldsymbol{R}_2 - \boldsymbol{R}_1)$$

for $\alpha \in [0, 1]$.

We CAN do:

$$\begin{aligned}\boldsymbol{R} &= (\boldsymbol{R}_2\boldsymbol{R}_1^T)^\alpha \boldsymbol{R}_1 \\ &= \boldsymbol{R}_1(\boldsymbol{R}_1^T\boldsymbol{R}_2)^\alpha\end{aligned}$$

Why?

1. $\boldsymbol{R}_1^T\boldsymbol{R}_2$ is the local frame error/*difference*,
2. $\boldsymbol{R}_2\boldsymbol{R}_1^T$ is the world frame error/*difference*.

Interpolating Orientations (2)

- **World frame error:**

$$\begin{aligned} \boldsymbol{R} &= (\boldsymbol{R}_2\boldsymbol{R}_1^T)^\alpha \boldsymbol{R}_1 \\ &= \exp(\alpha \log(\widetilde{\boldsymbol{R}_2\boldsymbol{R}_1^T}))\boldsymbol{R}_1 \\ &= \exp(\alpha \boldsymbol{\theta}_{21})\boldsymbol{R}_1 \end{aligned}$$

- **Local frame error:**

$$\begin{aligned} \boldsymbol{R} &= \boldsymbol{R}_1(\boldsymbol{R}_1^T\boldsymbol{R}_2)^\alpha \\ &= \boldsymbol{R}_1 \exp(\alpha \log(\widetilde{\boldsymbol{R}_1^T\boldsymbol{R}_2})) \\ &= \boldsymbol{R}_1 \exp(\alpha \boldsymbol{\theta}_{12}) \end{aligned}$$

Angular Velocities - Reminder

Let's summarize:

$$\hat{\omega}_w = \dot{\boldsymbol{R}}_{wb}\boldsymbol{R}_{wb}^T$$
$$\hat{\omega}_b = \boldsymbol{R}_{wb}^T\dot{\boldsymbol{R}}_{wb}$$

- $\boldsymbol{\omega}_w \in \mathbb{R}^3$ is the angular velocity of the body with respect to (wrt) the world frame
- $\boldsymbol{\omega}_b \in \mathbb{R}^3$ is the angular velocity of the body wrt the body frame
- ω_b **IS NOT** the angular velocity relative to the moving body frame, but relative to the fixed world frame
- ω_w **DOES NOT** depend on the choice of the body frame
- ω_b **DOES NOT** depend on the choice of the world frame
- $\dot{\boldsymbol{R}}_{wb}\boldsymbol{R}_{wb}^T$ is independent from the body frame
- $\boldsymbol{R}_{wb}^T\dot{\boldsymbol{R}}_{wb}$ is independent from the world frame
- Let's assume an angular velocity expressed in frame $\{d\}$, $\boldsymbol{\omega}_d$, we can express it in the frame $\{c\}$: $\boldsymbol{\omega}_c = \boldsymbol{R}_{cd}\boldsymbol{\omega}_d$

Spatial Velocity (1)

Let's try to do the same for homogeneous transformation matrices:

Spatial Velocity (1)

Let's try to do the same for homogeneous transformation matrices:

$$\begin{aligned}
\boldsymbol{T}_{wb}^{-1}\dot{\boldsymbol{T}}_{wb} &= \begin{bmatrix} \boldsymbol{R}_{wb}^T & -\boldsymbol{R}_{wb}^T\boldsymbol{p}_w \\ 0 & 1 \end{bmatrix} \begin{bmatrix} \dot{\boldsymbol{R}}_{wb} & \dot{\boldsymbol{p}}_w \\ 0 & 0 \end{bmatrix} \\
&= \begin{bmatrix} \boldsymbol{R}_{wb}^T\dot{\boldsymbol{R}}_{wb} & \boldsymbol{R}_{wb}^T\dot{\boldsymbol{p}}_w \\ 0 & 0 \end{bmatrix} \\
&= \begin{bmatrix} \hat{\boldsymbol{\omega}}_b & \boldsymbol{v}_b \\ 0 & 0 \end{bmatrix}
\end{aligned}$$

$\dot{\boldsymbol{p}}_w$ is the linear velocity of the body expressed in the world frame, and thus $\boldsymbol{R}_{wb}^T\dot{\boldsymbol{p}}_w$ is the linear velocity of the body expressed in body frame: $\boldsymbol{v}_b$.

Spatial Velocity (2)

Let's put $\boldsymbol{\omega}_b$ and $\boldsymbol{v}_b$ in one vector and call it **Body Spatial Velocity** (or **body twist**): $\mathcal{V}_b = \begin{bmatrix} \boldsymbol{\omega}_b \\ \boldsymbol{v}_b \end{bmatrix} \in \mathbb{R}^6$. We can now write:

$$\boldsymbol{T}_{wb}^{-1}\dot{\boldsymbol{T}}_{wb} = [\mathcal{V}_b] = \begin{bmatrix} \hat{\boldsymbol{\omega}}_b & \boldsymbol{v}_b \\ 0 & 0 \end{bmatrix}$$

We also have the **World Spatial Velocity** (or **spatial twist**): $\mathcal{V}_w = \begin{bmatrix} \boldsymbol{\omega}_w \\ \boldsymbol{v}_w \end{bmatrix} \in \mathbb{R}^6$. We write as well:

$$\dot{\boldsymbol{T}}_{wb}\boldsymbol{T}_{wb}^{-1} = [\mathcal{V}_w] = \begin{bmatrix} \dot{\boldsymbol{R}}_{wb}\boldsymbol{R}_{wb}^T & \dot{\boldsymbol{p}}_w - \dot{\boldsymbol{R}}_{wb}\boldsymbol{R}_{wb}^T\boldsymbol{p}_w \\ 0 & 0 \end{bmatrix} = \begin{bmatrix} \hat{\boldsymbol{\omega}}_w & \boldsymbol{v}_w \\ 0 & 0 \end{bmatrix}$$

Spatial Velocity (3)

A few remarks:

- $\boldsymbol{v}_w = \dot{\boldsymbol{p}}_w - \dot{\boldsymbol{R}}_{wb}\boldsymbol{R}_{wb}^T\boldsymbol{p}_w$ — **IS NOT** the linear velocity of the body expressed in the world frame

Spatial Velocity (3)

A few remarks:

- $\boldsymbol{v}_w = \dot{\boldsymbol{p}}_w - \dot{\boldsymbol{R}}_{wb}\boldsymbol{R}_{wb}^T\boldsymbol{p}_w$ — **IS NOT** the linear velocity of the body expressed in the world frame (this would just be $\dot{\boldsymbol{p}}_w$)
- $\boldsymbol{v}_w = \dot{\boldsymbol{p}}_w + \boldsymbol{\omega}_w \times (-\boldsymbol{p}_w)$ — now $\boldsymbol{v}_w$ is the velocity of the center of the world frame expressed in the world frame if the body was big enough to include this point
- $\boldsymbol{\omega}_b$ is the angular velocity of the body expressed in the body frame and $\boldsymbol{\omega}_w$ is the angular velocity of the body expressed in the world frame
- $\boldsymbol{v}_b$ is the linear velocity of the center of the body frame
- $\boldsymbol{v}_w$ is the linear velocity of the center of the world frame

Spatial Velocity (4)

We can go from $\mathcal{V}_b$ to $\mathcal{V}_w$:

$$[\mathcal{V}_b] = \boldsymbol{T}_{wb}^{-1}\dot{\boldsymbol{T}}_{wb} = \boldsymbol{T}_{wb}^{-1}[\mathcal{V}_w]\boldsymbol{T}_{wb}$$

And backwards:

$$[\mathcal{V}_w] = \dot{\boldsymbol{T}}_{wb}\boldsymbol{T}_{wb}^{-1} = \boldsymbol{T}_{wb}[\mathcal{V}_b]\boldsymbol{T}_{wb}^{-1}$$

Let's do some calculations:

$$[\mathcal{V}_w] = \begin{bmatrix} \boldsymbol{R}_{wb}\hat{\boldsymbol{\omega}}_b\boldsymbol{R}_{wb}^T & -\boldsymbol{R}_{wb}\hat{\boldsymbol{\omega}}_b\boldsymbol{R}_{wb}^T\boldsymbol{p}_w + \boldsymbol{R}_{wb}\boldsymbol{v}_b \\ 0 & 0 \end{bmatrix}$$

$$\begin{bmatrix} \boldsymbol{\omega}_w \\ \boldsymbol{v}_w \end{bmatrix} = \begin{bmatrix} \boldsymbol{R}_{wb} & 0 \\ \hat{\boldsymbol{p}}_{wb}\boldsymbol{R}_{wb} & \boldsymbol{R}_{wb} \end{bmatrix} \begin{bmatrix} \boldsymbol{\omega}_b \\ \boldsymbol{v}_b \end{bmatrix}$$

Adjoint Representation

Let's assume a transformation $\boldsymbol{T} = (\boldsymbol{R}, \boldsymbol{p})$. We say that its adjoint form, $[Ad_{\boldsymbol{T}}] \in \mathbb{R}^{6\times 6}$, is:

$$[Ad_{\boldsymbol{T}}] = \begin{bmatrix} \boldsymbol{R} & 0 \\ \hat{\boldsymbol{p}}\boldsymbol{R} & \boldsymbol{R} \end{bmatrix}$$

In other words:

- $\mathcal{V}_w = [Ad_{\boldsymbol{T}_{wb}}]\mathcal{V}_b$
- $\mathcal{V}_b = [Ad_{\boldsymbol{T}_{bw}}]\mathcal{V}_w$

A few properties:

- $[Ad_{\boldsymbol{T}}]^{-1} = [Ad_{\boldsymbol{T}^{-1}}]$
- $[Ad_{\boldsymbol{T}_1}][Ad_{\boldsymbol{T}_2}]\mathcal{V} = [Ad_{\boldsymbol{T}_1\boldsymbol{T}_2}]\mathcal{V}$

Twists - Screw interpretation

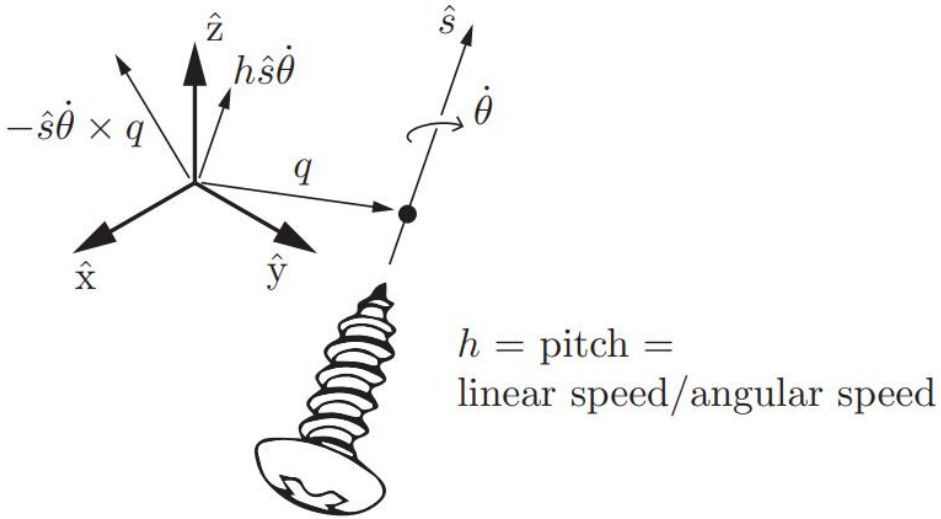

Source: Modern Robotics: Mechanics, Planning, and Control, *Kevin M. Lynch and Frank C. Park*, 2017, Cambridge University Press.

- Angular velocity $\boldsymbol{\omega} = \boldsymbol{r}\dot{\theta}$ ($\boldsymbol{r} = \hat{s}$ in the figure),

Twists - Screw interpretation

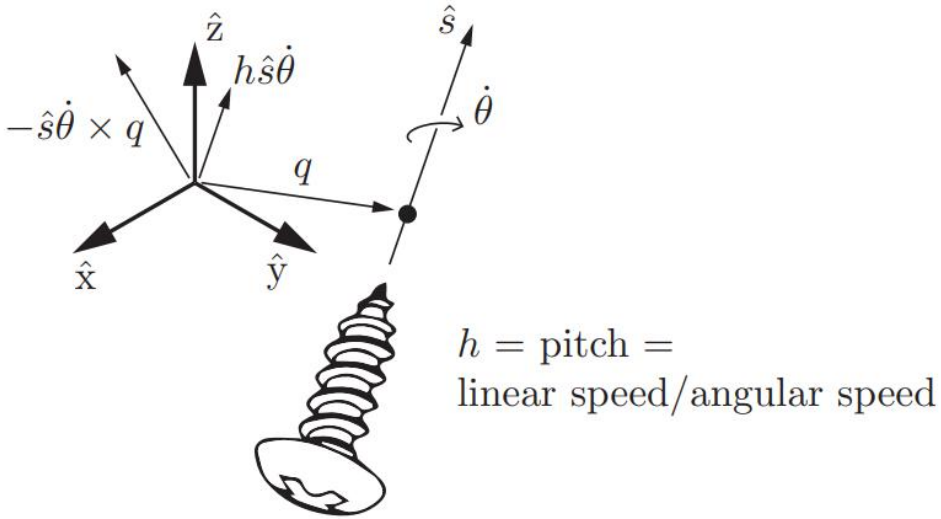

Source: Modern Robotics: Mechanics, Planning, and Control, *Kevin M. Lynch and Frank C. Park*, 2017, Cambridge University Press.

- Angular velocity $\boldsymbol{\omega} = \boldsymbol{r}\dot{\theta}$ ($\boldsymbol{r} = \hat{s}$ in the figure),
- Similarly, we can represent a twist $\mathcal{V} = \mathcal{S}\dot{\theta}$
- $\mathcal{S}$ is a screw axis!

Screw Axis

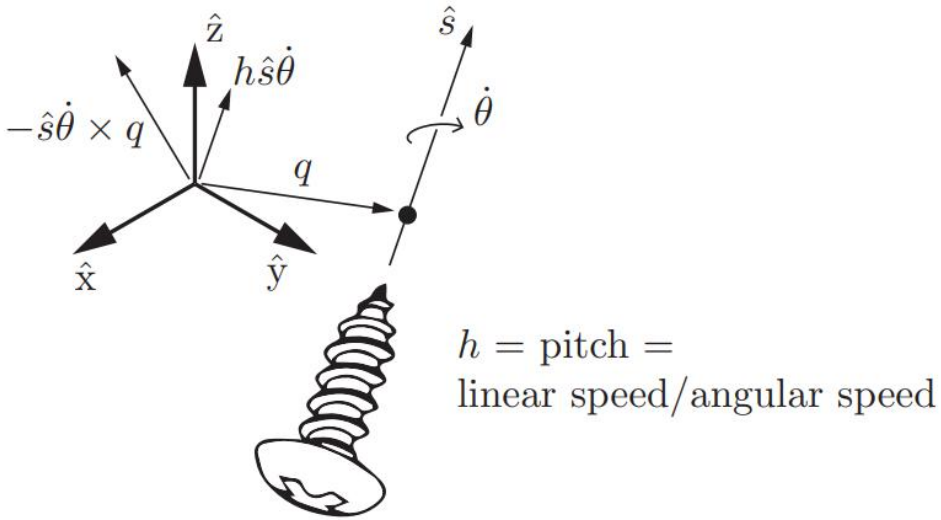

Source: Modern Robotics: Mechanics, Planning, and Control, *Kevin M. Lynch and Frank C. Park*, 2017, Cambridge University Press.

- $\mathcal{S}$ can be represented as the tuple $(h, \boldsymbol{r}, \boldsymbol{q})$
- $\boldsymbol{r}$ is the unit axis, $\boldsymbol{q}$ is any point on the axis
- h is the **screw pitch!**
- $\mathcal{V} = \begin{bmatrix} \boldsymbol{\omega} \\ \boldsymbol{v} \end{bmatrix} = \begin{bmatrix} \boldsymbol{r}\dot{\theta} \\ -\boldsymbol{r}\dot{\theta} \times \boldsymbol{q} + h\boldsymbol{r}\dot{\theta} \end{bmatrix}$

Twists - Screw interpretation (2)

- $\mathcal{V} = \begin{bmatrix} \boldsymbol{\omega} \\ \boldsymbol{v} \end{bmatrix} = \begin{bmatrix} \boldsymbol{r}\dot{\theta} \\ -\boldsymbol{r}\dot{\theta} \times \boldsymbol{q} + h\boldsymbol{r}\dot{\theta} \end{bmatrix}$
- Two cases:
  - If $\|\boldsymbol{\omega}\| \neq 0$, then $\mathcal{S} = \frac{\mathcal{V}}{\|\boldsymbol{\omega}\|} = \begin{bmatrix} \frac{\boldsymbol{\omega}}{\|\boldsymbol{\omega}\|} \\ \frac{\boldsymbol{v}}{\|\boldsymbol{\omega}\|} \end{bmatrix}$, and thus $\mathcal{S}\dot{\theta} = \mathcal{V}$, $\dot{\theta} = \|\boldsymbol{\omega}\|$
  - If $\|\boldsymbol{\omega}\| = 0$, then $\mathcal{S} = \frac{\mathcal{V}}{\|\boldsymbol{v}\|} = \begin{bmatrix} \mathbf{0} \\ \frac{\boldsymbol{v}}{\|\boldsymbol{v}\|} \end{bmatrix}$, and thus $\mathcal{S}\dot{\theta} = \mathcal{V}$, $\dot{\theta} = \|\boldsymbol{v}\|$
- $\mathcal{S} = \begin{bmatrix} \boldsymbol{r} \\ \boldsymbol{\rho} \end{bmatrix}$, where $\|\boldsymbol{r}\| = 1$ or ($\|\boldsymbol{r}\| = 0$ and $\|\boldsymbol{\rho}\| = 1$)
- $\widehat{\mathcal{S}} = [\mathcal{S}] = \begin{bmatrix} \hat{\boldsymbol{r}} & \boldsymbol{\rho} \\ 0 & 0 \end{bmatrix}$, $\widetilde{[\mathcal{S}]} = \mathcal{S} = \begin{bmatrix} \boldsymbol{r} \\ \boldsymbol{\rho} \end{bmatrix}$
- $\mathcal{S}_a = [Ad_{\boldsymbol{T}_{ab}}]\mathcal{S}_b$
- $\mathcal{S}_b = [Ad_{\boldsymbol{T}_{ba}}]\mathcal{S}_a$

Exponential Coordinates of Transformation Matrices

By analogy to the Axis-Angle representation for rotations, we can define the exponential coordinates for the Screw axis:

- $\mathcal{S}\theta = \widehat{\log \boldsymbol{T}}$
- $\boldsymbol{T} = \exp(\widehat{\mathcal{S}}\theta)$
- $\boldsymbol{T}$ is a homogeneous transformation matrix, $\mathcal{S}$ is a screw axis

Exponential Coordinates of Transformation Matrices

By analogy to the Axis-Angle representation for rotations, we can define the exponential coordinates for the Screw axis:

- $\mathcal{S}\theta = \widehat{\log \boldsymbol{T}}$
- $\boldsymbol{T} = \exp(\widehat{\mathcal{S}}\theta)$
- $\boldsymbol{T}$ is a homogeneous transformation matrix, $\mathcal{S}$ is a screw axis
- We can compute the above more efficiently than regular exp/log matrix operations

Exponential Coordinates of Transformations

$$\mathcal{S} = \begin{bmatrix} \boldsymbol{r} \\ \boldsymbol{\rho} \end{bmatrix}$$

- If $\|\boldsymbol{r}\| = 1$:

$$\exp(\widehat{\mathcal{S}}\theta) = \begin{bmatrix} \exp(\widehat{\boldsymbol{\theta}}) & \left(\boldsymbol{I}\theta + (1-\cos\theta)\hat{\boldsymbol{r}} + (\theta - \sin\theta)\hat{\boldsymbol{r}}\hat{\boldsymbol{r}}\right)\boldsymbol{\rho} \\ \boldsymbol{0} & 1 \end{bmatrix}$$
$$= \boldsymbol{T}$$

  where $\boldsymbol{\theta} = \boldsymbol{r}\theta$.

- Else if $\|\boldsymbol{r}\| = 0$ and $\|\boldsymbol{\rho}\| = 1$:

$$\exp(\widehat{\mathcal{S}}\theta) = \begin{bmatrix} \boldsymbol{I} & \boldsymbol{\rho}\theta \\ \boldsymbol{0} & 1 \end{bmatrix}$$
$$= \boldsymbol{T}$$

Logarithm of Transformations

$$\mathcal{S} = \begin{bmatrix} \boldsymbol{r} \\ \boldsymbol{\rho} \end{bmatrix}, \exp(\widehat{\mathcal{S}}\theta) = \begin{bmatrix} \boldsymbol{R} & \boldsymbol{p} \\ \boldsymbol{0} & 1 \end{bmatrix} = \boldsymbol{T}, \widetilde{\log(\boldsymbol{T})} = \mathcal{S}\theta$$

- If $\boldsymbol{R} = \boldsymbol{I}$:

$$\begin{aligned} \boldsymbol{r} &= \boldsymbol{0} \\ \boldsymbol{\rho} &= \frac{\boldsymbol{p}}{\|\boldsymbol{p}\|} \\ \theta &= \|\boldsymbol{p}\| \end{aligned}$$

- Else:

$$\begin{aligned} \boldsymbol{r}\theta &= \widetilde{\log(\boldsymbol{R})} \\ \boldsymbol{\rho} &= \left(\frac{1}{\theta}\boldsymbol{I} - \frac{1}{2}\hat{\boldsymbol{r}} + (\frac{1}{\theta} - \frac{1}{2}\cot\frac{\theta}{2})\hat{\boldsymbol{r}}\hat{\boldsymbol{r}}\right)\boldsymbol{p} \end{aligned}$$

Exponential Coordinates

Orientations:

$$\boldsymbol{r} \rightarrow \text{ axis of rotation}$$

$$\boldsymbol{\omega} = \boldsymbol{r}\dot{\theta} \rightarrow \text{angular velocity}$$

$$\boldsymbol{\theta} = \boldsymbol{r}\theta$$

$$\boldsymbol{R} = \exp(\widehat{\boldsymbol{\theta}})$$

$$\boldsymbol{\theta} = \widetilde{\log(\boldsymbol{R})}$$

Full poses:

$$\mathcal{S} = \begin{bmatrix} \boldsymbol{r} \\ \boldsymbol{\rho} \end{bmatrix} \rightarrow \text{screw axis}$$

$$\mathcal{V} = \mathcal{S}\dot{\theta} \rightarrow \text{twist}$$

$$\boldsymbol{\tau} = \mathcal{S}\theta = \begin{bmatrix} \boldsymbol{r}\theta \\ \boldsymbol{\rho} \end{bmatrix} \text{ or } \begin{bmatrix} \mathbf{0} \\ \boldsymbol{\rho}\theta \end{bmatrix}$$

$$\boldsymbol{T} = \begin{bmatrix} \boldsymbol{R} & \boldsymbol{p} \\ \mathbf{0} & 1 \end{bmatrix} = \exp(\widehat{\boldsymbol{\tau}})$$

$$\boldsymbol{\tau} = \widetilde{\log(\boldsymbol{T})}$$

$\boldsymbol{\theta}$ and $\boldsymbol{\tau}$ are called **exponential coordinates**.

Pose Errors or Differences

In other words, I am at $\boldsymbol{T}_{wc}$ and I want to end up at $\boldsymbol{T}_{wt}$. What is the pose error or difference?

Pose Errors or Differences

In other words, I am at $\boldsymbol{T}_{wc}$ and I want to end up at $\boldsymbol{T}_{wt}$. What is the pose error or difference?

- First, a pose difference is another transformation matrix!

Pose Errors or Differences

In other words, I am at $\boldsymbol{T}_{wc}$ and I want to end up at $\boldsymbol{T}_{wt}$. What is the pose error or difference?

- First, a pose difference is another transformation matrix!
- I can compute $\boldsymbol{T}_{ct}$:

Pose Errors or Differences

In other words, I am at $\boldsymbol{T}_{wc}$ and I want to end up at $\boldsymbol{T}_{wt}$. What is the pose error or difference?

- First, a pose difference is another transformation matrix!
- I can compute $\boldsymbol{T}_{ct}$:

$$
\begin{aligned}
\boldsymbol{T}_{ct} &= \boldsymbol{T}_{tc}^{-1} \\
&= (\boldsymbol{T}_{tw}\boldsymbol{T}_{wc})^{-1} \\
&= (\boldsymbol{T}_{wt}^{T}\boldsymbol{T}_{wc})^{-1} \\
\Rightarrow \boldsymbol{T}_{ct} &= \boldsymbol{T}_{wc}^{-1}\boldsymbol{T}_{wt}
\end{aligned}
$$

Pose Errors or Differences

In other words, I am at $\boldsymbol{T}_{wc}$ and I want to end up at $\boldsymbol{T}_{wt}$. What is the pose error or difference?

- First, a pose difference is another transformation matrix!
- I can compute $\boldsymbol{T}_{ct}$:

$$\begin{aligned}
\boldsymbol{T}_{ct} &= \boldsymbol{T}_{tc}^{-1} \\
&= (\boldsymbol{T}_{tw}\boldsymbol{T}_{wc})^{-1} \\
&= (\boldsymbol{T}_{wt}^{T}\boldsymbol{T}_{wc})^{-1} \\
\Rightarrow \boldsymbol{T}_{ct} &= \boldsymbol{T}_{wc}^{-1}\boldsymbol{T}_{wt}
\end{aligned}$$

- This is the pose error expressed in *body frame*
- How can I get the error in *world frame*?

$$\begin{aligned}
\boldsymbol{T}_{ct}^{w}\boldsymbol{T}_{wc} &= \boldsymbol{T}_{wt} \\
\Rightarrow \boldsymbol{T}_{ct}^{w} &= \boldsymbol{T}_{wt}\boldsymbol{T}_{wc}^{-1}
\end{aligned}$$

Integrating Full Poses with Twists!

$$\begin{aligned}\boldsymbol{T}_{k+1} &= \boldsymbol{T}_k \exp([\mathcal{V}_b]dt) \\ &= \exp([\mathcal{V}_w]dt)\,\boldsymbol{T}_k\end{aligned}$$

Be careful:

- "Right" multiplication is *local*
- "Left" multiplication is *global/world*

Interpolating Full Poses

We cannot do:

$$\boldsymbol{T} = \boldsymbol{T}_1 + \alpha(\boldsymbol{T}_2 - \boldsymbol{T}_1)$$

for $\alpha \in [0, 1]$.

Interpolating Full Poses

We cannot do:

$$\boldsymbol{T} = \boldsymbol{T}_1 + \alpha(\boldsymbol{T}_2 - \boldsymbol{T}_1)$$

for $\alpha \in [0, 1]$.

We CAN do:

$$\begin{aligned}\boldsymbol{T} &= (\boldsymbol{T}_2 \boldsymbol{T}_1^{-1})^{\alpha} \boldsymbol{T}_1 \\ &= \boldsymbol{T}_1 (\boldsymbol{T}_1^{-1} \boldsymbol{T}_2)^{\alpha}\end{aligned}$$

Why?

Interpolating Full Poses

We cannot do:

$$\boldsymbol{T} = \boldsymbol{T}_1 + \alpha(\boldsymbol{T}_2 - \boldsymbol{T}_1)$$

for $\alpha \in [0, 1]$.

We CAN do:

$$\begin{aligned}\boldsymbol{T} &= (\boldsymbol{T}_2 \boldsymbol{T}_1^{-1})^{\alpha} \boldsymbol{T}_1 \\ &= \boldsymbol{T}_1 (\boldsymbol{T}_1^{-1} \boldsymbol{T}_2)^{\alpha}\end{aligned}$$

Why?

1. $\boldsymbol{T}_1^{-1} \boldsymbol{T}_2$ is the local frame error/*difference*,
2. $\boldsymbol{T}_2 \boldsymbol{T}_1^{-1}$ is the global frame error/*difference*.

Interpolating Full Poses (2)

- **World frame error:**

$$\begin{aligned}\boldsymbol{T} &= (\boldsymbol{T}_2\boldsymbol{T}_1^{-1})^{\alpha}\boldsymbol{T}_1 \\ &= \exp(\alpha\log(\widetilde{\boldsymbol{T}_2\boldsymbol{T}_1^{-1}}))\boldsymbol{T}_1 \\ &= \exp(\alpha\boldsymbol{\tau}_{21})\boldsymbol{T}_1\end{aligned}$$

- **Local frame error:**

$$\begin{aligned}\boldsymbol{T} &= \boldsymbol{T}_1(\boldsymbol{T}_1^{-1}\boldsymbol{T}_2)^{\alpha} \\ &= \boldsymbol{T}_1\exp(\alpha\log(\widetilde{\boldsymbol{T}_1^{-1}\boldsymbol{T}_2})) \\ &= \boldsymbol{T}_1\exp(\alpha\boldsymbol{\tau}_{12})\end{aligned}$$

Exponential Coordinates Code Example

```python
    omega_w = T1[:3, :3] @ omega_b # rotate local omega to world frame
    Vw = np.vstack([omega_w, np.zeros((3, 1))])
    T1d = spatial_velocity_to_deriv_homogeneous(Vw, T1)
    T2d = spatial_velocity_local_to_deriv_homogeneous(Vb, T2)

    T1 = T1 + T1d * dt # Euler integration!
    T2 = T2 + T2d * dt # Euler integration!

# These two should be very similar
print(T1)
print("========================")
print(T2)
print("========================")
print(np.linalg.norm(T1-T2))
```

```
[[ 1.       0.       0.       0.     ]
 [ 0.      -0.49001 -0.9005   0.     ]
 [ 0.       0.9005  -0.49001  0.     ]
 [ 0.       0.       0.       1.     ]]
========================
[[ 1.       0.       0.       0.     ]
 [ 0.      -0.49001 -0.9005   0.     ]
 [ 0.       0.9005  -0.49001  0.     ]
 [ 0.       0.       0.       1.     ]]
========================
0.0
```

Spatial Forces

Analogously to the velocities we can study the forces, $\boldsymbol{f}$, and moments, $\boldsymbol{m}$, that are exterted on a rigid body:

$$\mathcal{F} = \begin{bmatrix} \boldsymbol{m} \\ \boldsymbol{f} \end{bmatrix} \in \mathbb{R}^6$$

We call $\mathcal{F}$ **spatial force** (or **wrench**). If we have a *spatial force* $\mathcal{F}_b$ expressed in a frame $\{b\}$, we can express it in frame $\{w\}$:

$$\mathcal{F}_w = [Ad_{\boldsymbol{T}_{bw}}]^T \mathcal{F}_b$$

and backwards:

$$\mathcal{F}_b = [Ad_{\boldsymbol{T}_{wb}}]^T \mathcal{F}_w$$

Forward Kinematics (1)

End-effector

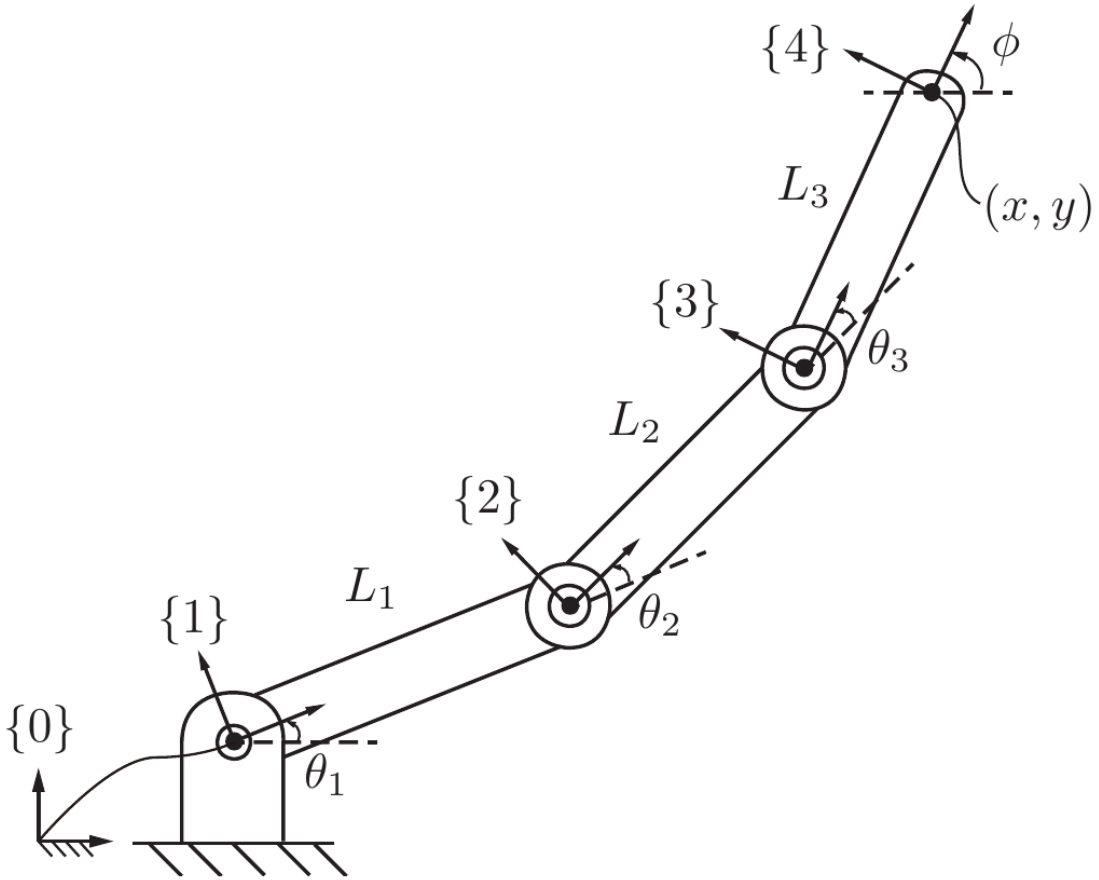

Source: Modern Robotics: Mechanics, Planning, and Control, *Kevin M. Lynch and Frank C. Park*, 2017, Cambridge University Press.

Forward Kinematics (2)

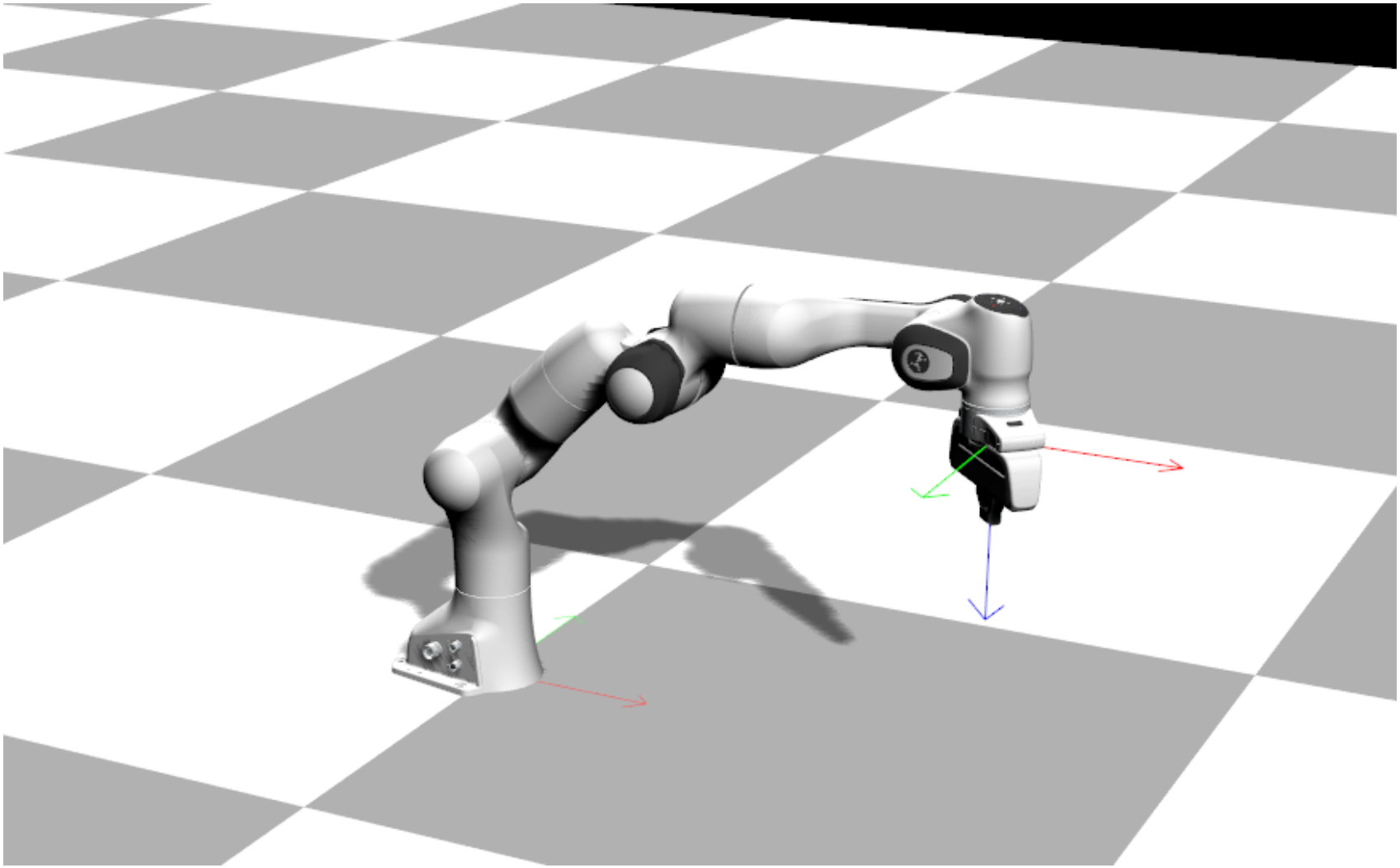

Forward Kinematics (3)

We can use our transformation matrices:

End-effector

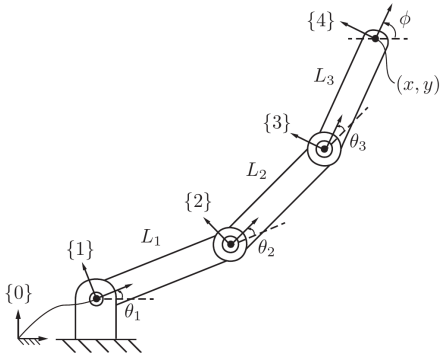

Source: Modern Robotics: Mechanics, Planning, and Control, *Kevin M. Lynch and Frank C. Park*, 2017, Cambridge University Press.

$$(x, y, \phi) \equiv \boldsymbol{T}_{04} = \boldsymbol{T}_{01}\boldsymbol{T}_{12}\boldsymbol{T}_{23}\boldsymbol{T}_{34}$$

where

$$\boldsymbol{T}_{01} = \begin{bmatrix} cos\theta_1 & -sin\theta_1 & 0 & 0 \\ sin\theta_1 & cos\theta_1 & 0 & 0 \\ 0 & 0 & 1 & 0 \\ 0 & 0 & 0 & 1 \end{bmatrix} \quad \boldsymbol{T}_{12} = \begin{bmatrix} cos\theta_2 & -sin\theta_2 & 0 & L_1 \\ sin\theta_2 & cos\theta_2 & 0 & 0 \\ 0 & 0 & 1 & 0 \\ 0 & 0 & 0 & 1 \end{bmatrix}$$

$$\boldsymbol{T}_{23} = \begin{bmatrix} cos\theta_3 & -sin\theta_3 & 0 & L_2 \\ sin\theta_3 & cos\theta_3 & 0 & 0 \\ 0 & 0 & 1 & 0 \\ 0 & 0 & 0 & 1 \end{bmatrix} \quad \boldsymbol{T}_{34} = \begin{bmatrix} 1 & 0 & 0 & L_3 \\ 0 & 1 & 0 & 0 \\ 0 & 0 & 1 & 0 \\ 0 & 0 & 0 & 1 \end{bmatrix}$$

Inverse Kinematics

- This is the "opposite" problem of forward kinematics
- We can find closed-form solutions for some systems
- We can develop iterative algorithms
- We can view the problem as an optimization problem
  - We can use kinematic information!
  - Or we can go black-box!
  - We can take advantage of numerical optimization methods

Bibliography

Chapter 3 from **Modern Robotics: Mechanics, Planning, and Control**, *Kevin M. Lynch and Frank C. Park*, 2017, Cambridge University Press. ebook

Thank you

- **Any Questions?**
- **Office Hours**:
  - **Tue-Thu** *(10:00-12:00)*
  - 24/7 by email (`costashatz@upatras.gr`, subject: *ECE_IR_AM*)
- **Material and Announcements**

Laboratory of Automation & Robotics